Schematic
Diagrams
for

Nintendo ™
Entertainment System

Stock# 18-600

Nintendo, Gameboy, and Nintendo Entertainment Systems are trademarks of Nintendo of America, Inc.
These diagrams were reverse engineered by Electronix Corp. and are not original Nintendo schematics.
Copyright (C)1992 Electronix Corp. Not responsible for errors or omissions.

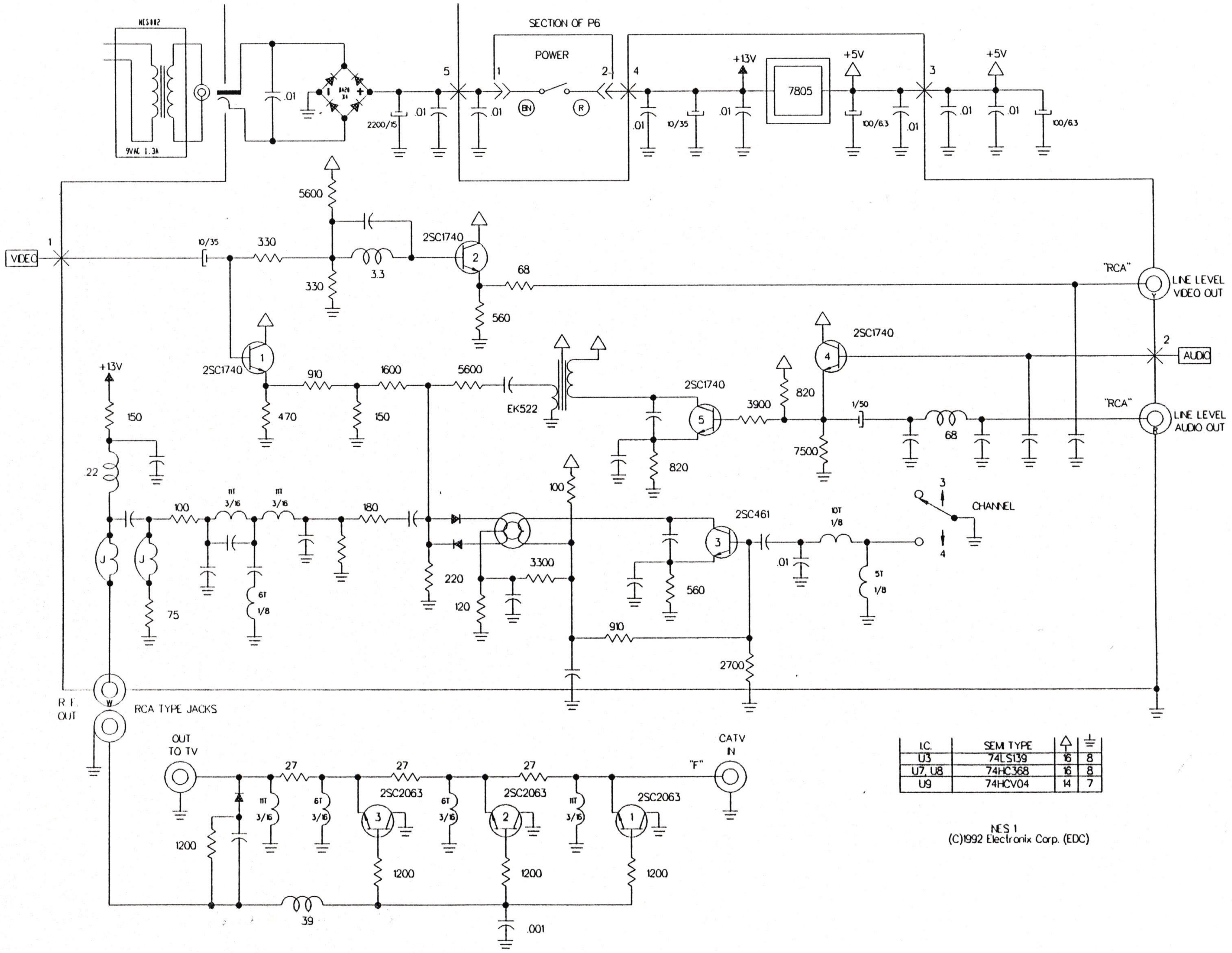

I.C.	SEMI TYPE	△	⏚
U3	74LS139	16	8
U7, U8	74HC368	16	8
U9	74HCV04	14	7

NES 1
(C)1992 Electronix Corp. (EDC)

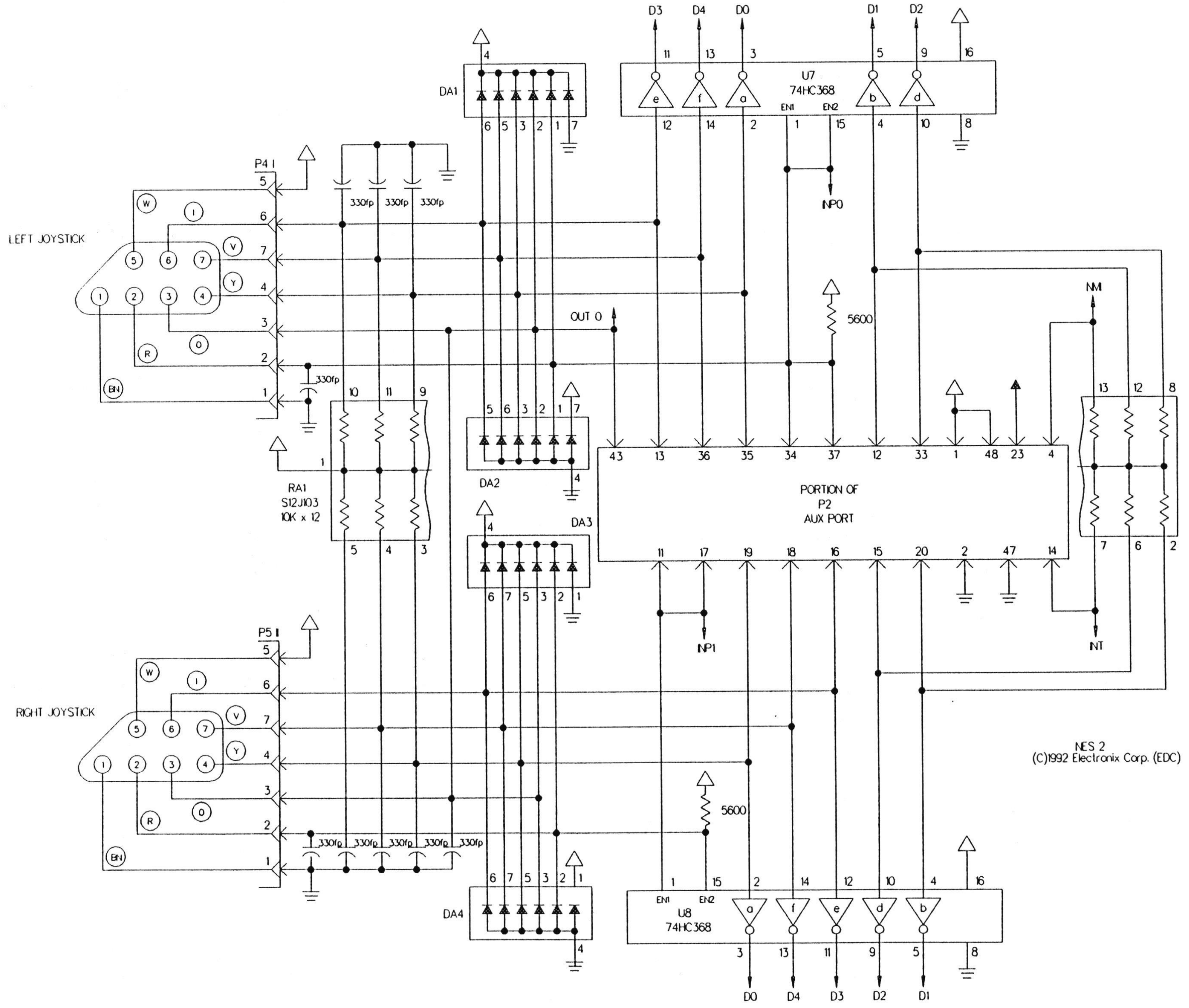
D3
D4
D0
D1
D2
U7
74HC368
EN1
EN2
NP0
DA1
P4 I
LEFT JOYSTICK
W
I
V
Y
R
O
BN
330fp
330fp 330fp 330fp
OUT 0
5600
NMI
RA1
S12J103
10K x 12
DA2
DA3
PORTION OF
P2
AUX PORT
NP1
NT
P5 I
RIGHT JOYSTICK
330fp 330fp 330fp 330fp 330fp
DA4
U8
74HC368
D0
D4
D3
D2
D1
NES 2
(C)1992 Electronix Corp. (EDC)

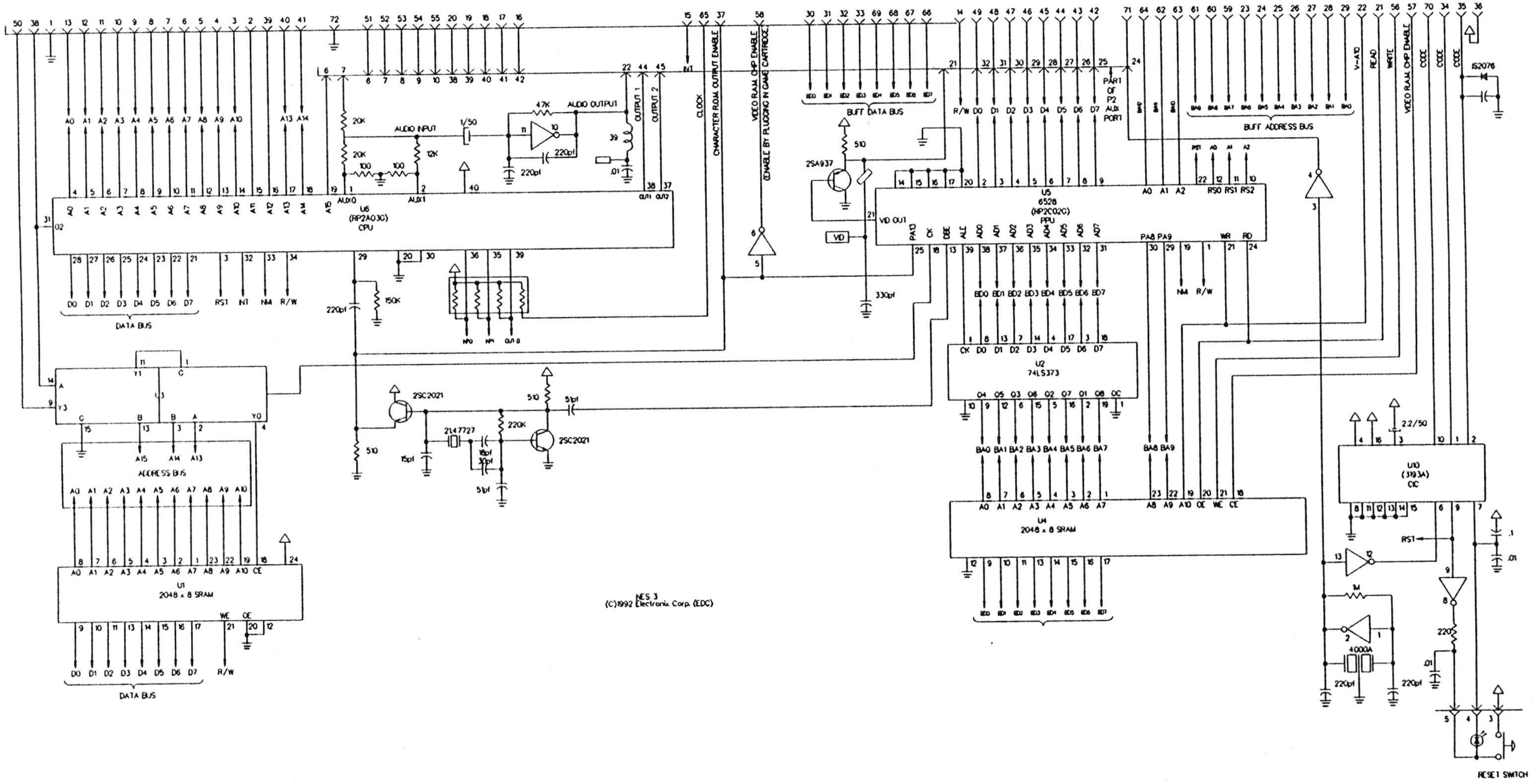

NES 3
(C)1992 Electronix Corp. (EDC)

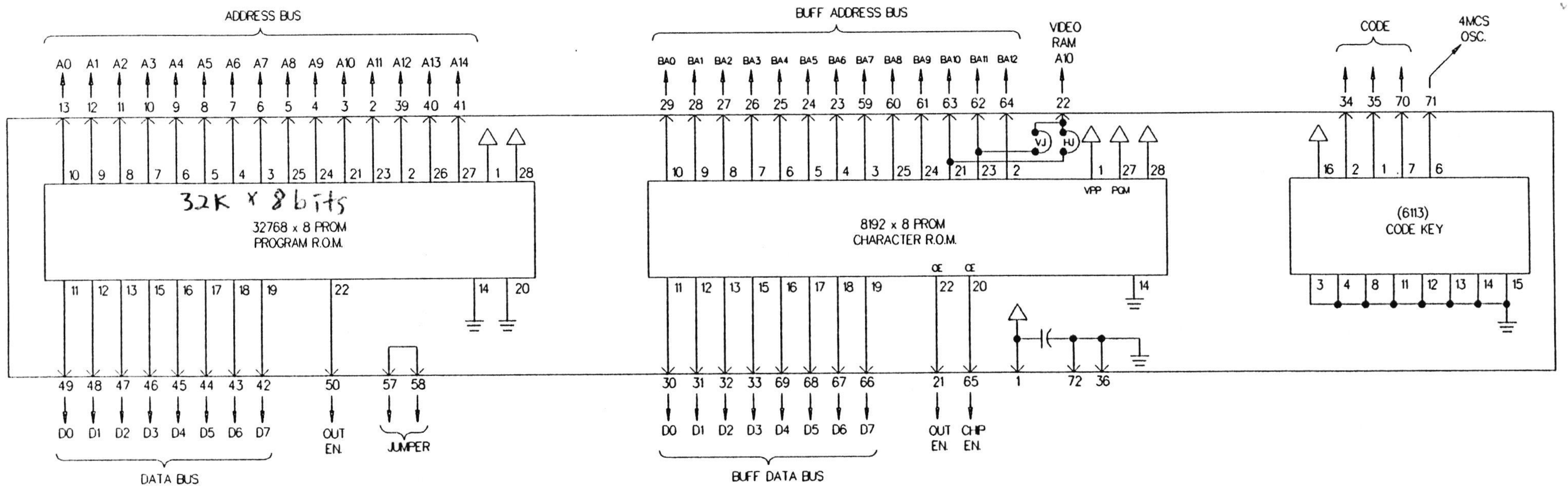

GAME CARTRIDGE DISPLAYED: "MARIO BROTHERS" CARTRIDGE IS STATIC SENSITIVE.
SOME CARTRIDGES CONTAIN A LITHIUM BATTERY, WHICH MUST BE OCCASIONALLY REPLACED.
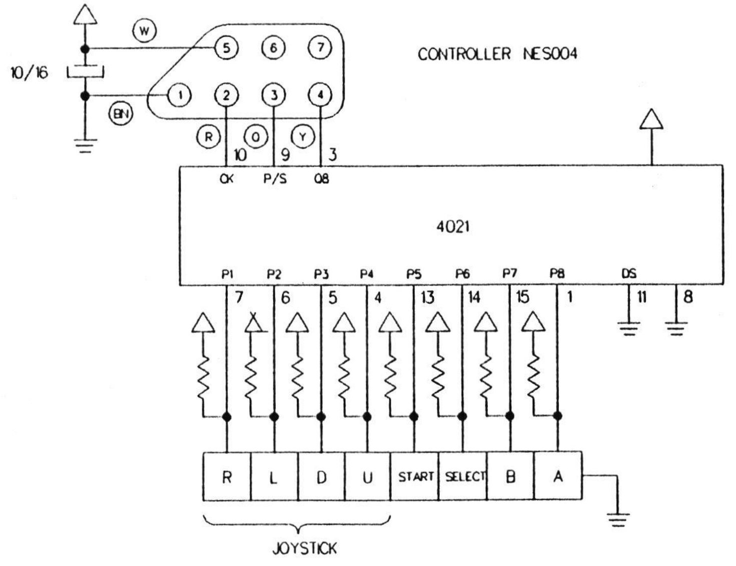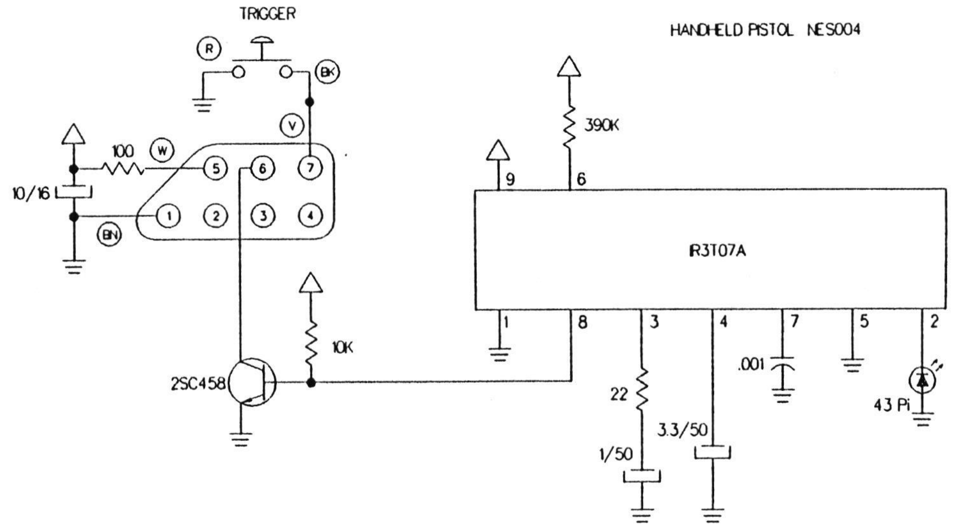
NES 4
(C)1992 Electronix Corp. (EDC)